Ver	Date	Engineering change notice	Dwg	App
1	2019/01/16	新規出図	YJ	Aizawa

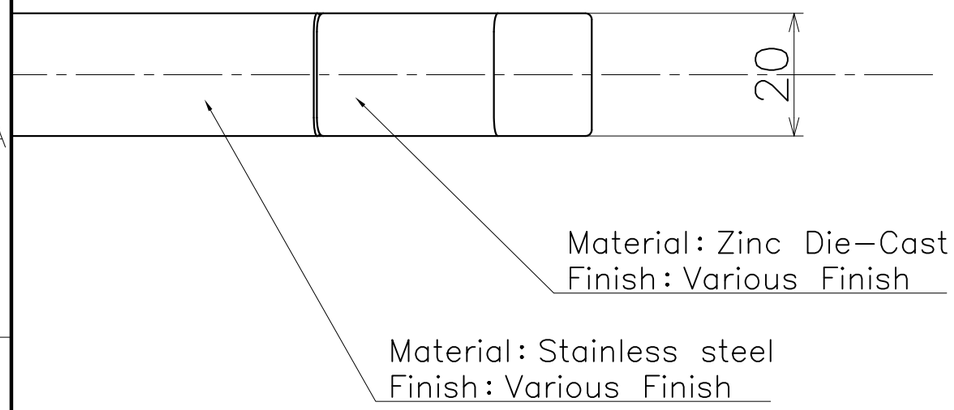

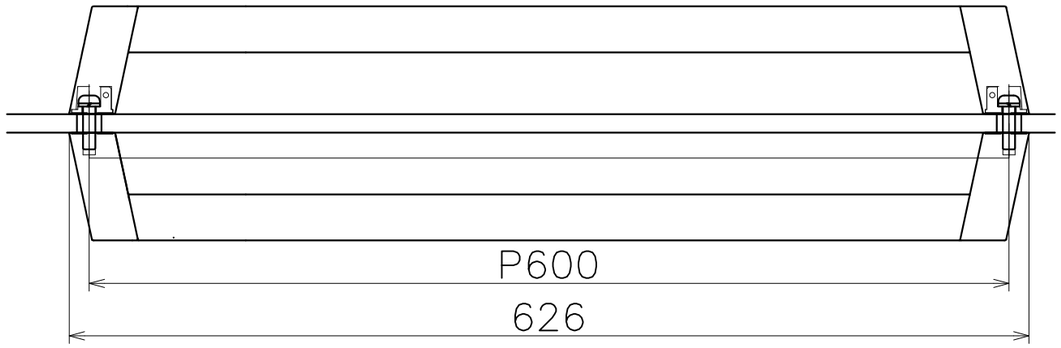

(S=1:4)

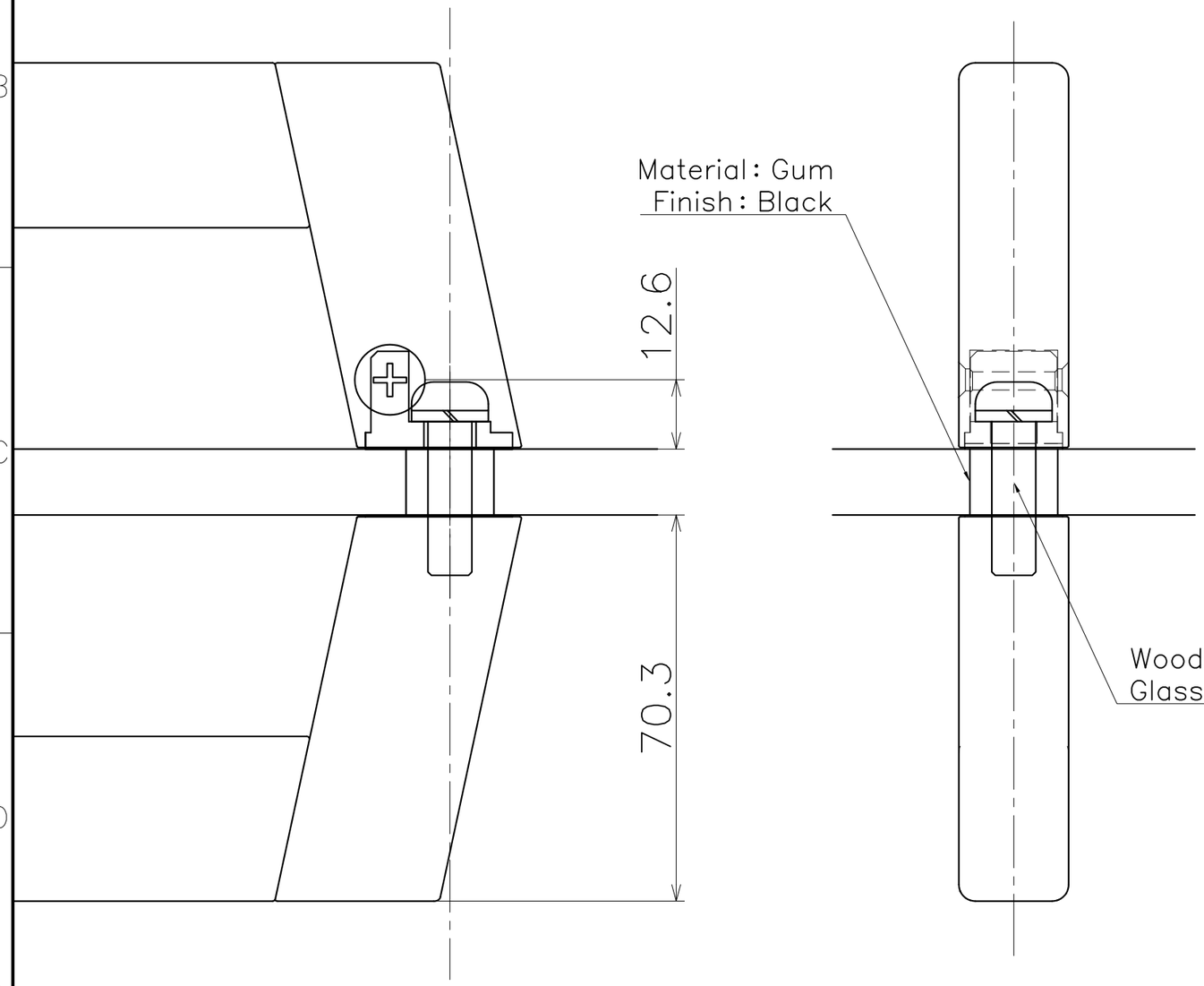

DA-159-X-0626

Finish: Leg	Finish: Grip	Code
Chrome	Scotch Wood	DA-159-C6-0626
Mirror Nickel	Scotch Wood	DA-159-D6-0626
Champagne	Scotch Wood	DA-159-RQ6-0626
Rose Gold	Scotch Wood	DA-159-JQ6-0626
Gold	Scotch Wood	DA-159-G6-0626
Mirror Black	Scotch Wood	DA-159-8Q6-0626
Satin Nickel	Scotch Wood	DA-159-N6-0626
Satin Champagne	Scotch Wood	DA-159-UQ6-0626
Satin Rose Gold	Scotch Wood	DA-159-TQ6-0626
Satin Gold	Scotch Wood	DA-159-H6-0626
Satin Black	Scotch Wood	DA-159-A6-0626

Product name	Name	Code
ドアハンドル	—	表参照
Door Handle	–	Ver01
KAWAJUN 河淳株式会社	Dim / Geo	S= 1:2 外形図

2019-05-13 16:08:16 DA-159-XX-0626_drawing (Compressed Wood)

A3

作成 【KAWAJUN】